Automatic Tool Changer

Cam Box (ATC) / Roller Cam

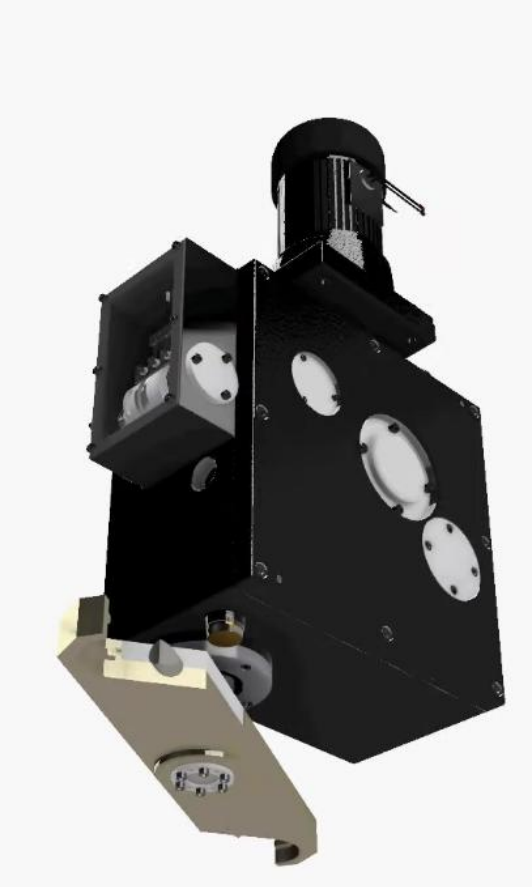

Name: Merdariu Timotei

Group: 1534e

Contents

1. TECHNICAL MEMO

1.1 Theoretical considerations
1.2 Purpose and definition of the project
1.3 Functional requirements imposed

2. COMPUTATIONAL AND CONSTRUCTIVE CONSIDERATIONS

2.1 Arm design

2.2 Bearing selection

2.3 Motor selection

2.4 Housing design considerations and maintenance

2.5 Conclusions

1. TECHNICAL MEMO

1.1 **Theoretical considerations**

Automatic Tool Changers (ATC) are essential subsystems of CNC machining centers, enabling rapid and repeatable tool exchange without operator intervention. Compared to manual or turret-based systems, ATCs significantly reduce non-productive time and improve machining flexibility.

Cam-driven ATCs are widely used due to their:

- Deterministic motion law
- High positional repeatability
- Compact construction
- Mechanical synchronization between tool motion phases

Globoidal cam mechanisms are particularly suitable for ATC applications because they allow complex spatial motion to be generated with a single rotating element, while maintaining smooth contact conditions between cam and roller follower.

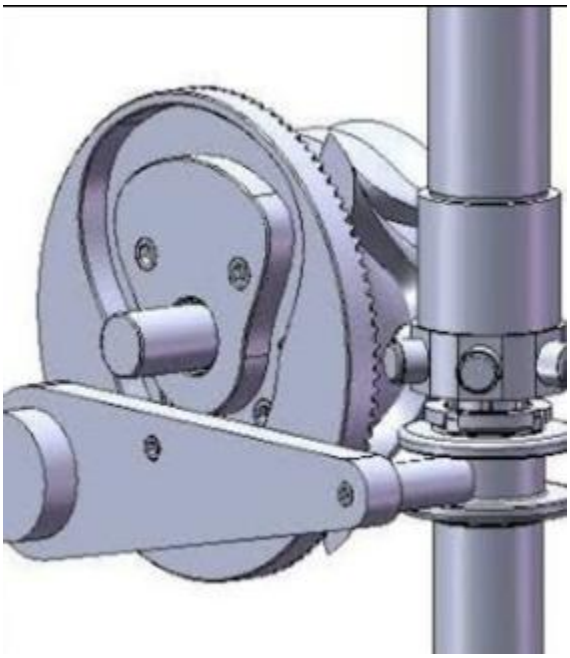

In a cam-driven ATC, the motion of the tool-changing arm is entirely defined by the cam geometry. This results in very high repeatability, which is critical during tool engagement and release.

1.2 Purpose and definition of the project

The objective of this project is the **design and technical documentation** of a globoidal cam-based Automatic Tool Changer intended for CNC machining centers. This ATC was designed based on mechanical synchronization using a single motor that performs a translation motion and a rotation one.

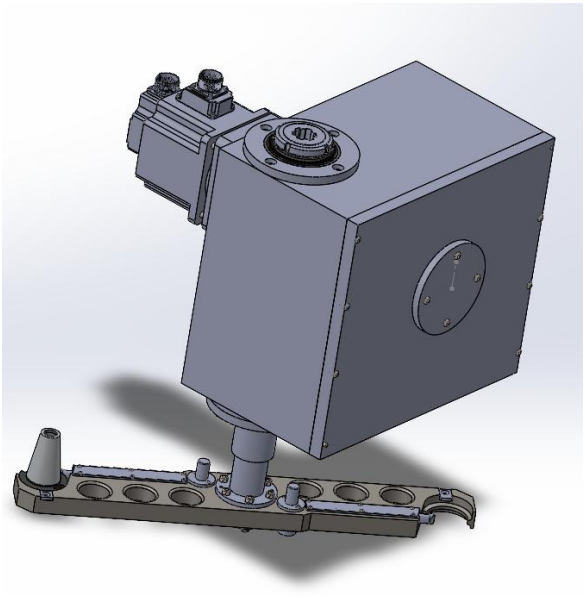

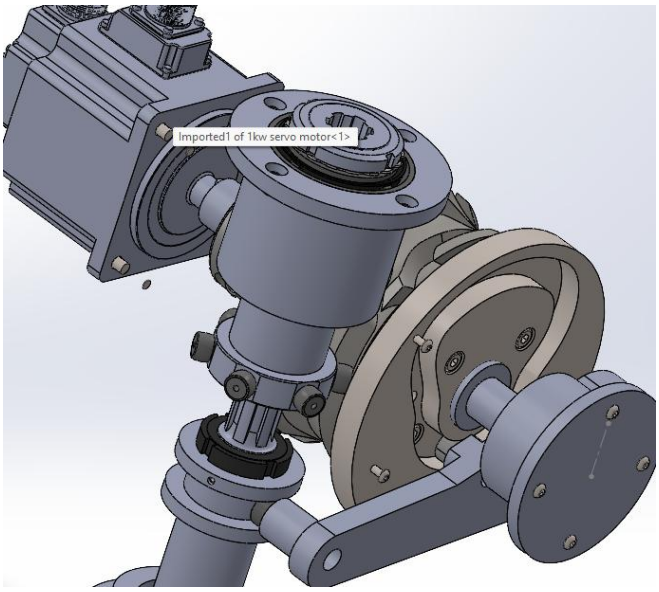

1.3 Functional requirements imposed

The Automatic Tool Changer must ensure reliable and repeatable tool exchange during CNC machine operation. In addition, the ATC must guarantee stable tool holding during machining operations. This implies that the mechanism must include a dwell or locking condition that maintains the arm in a fixed position while the spindle is active. The overall construction must be compact, mechanically robust, and suitable for integration within the machine envelope. From a functional standpoint, the ATC must operate using a single driving motor, with all motions mechanically synchronized and without reliance on sensor-based feedback for positioning.

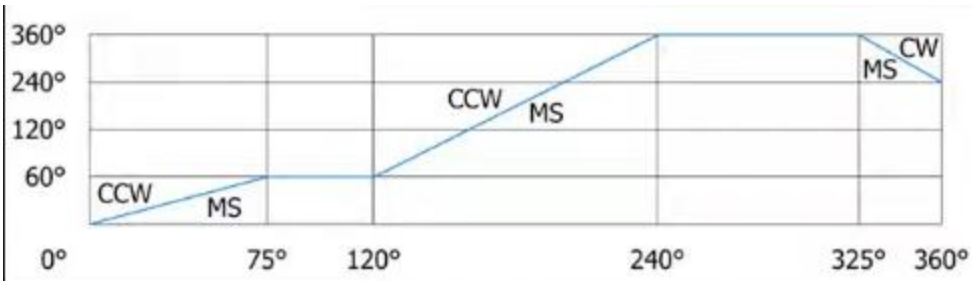

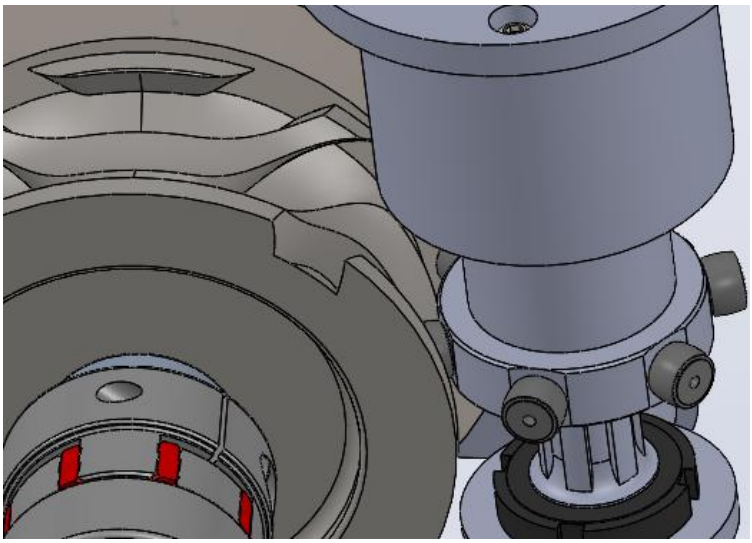

The provided polar graph illustrates the radial displacement profile of a roller cam in an Automatic Tool Changer (ATC) Cam Box over a full 360° rotation, enabling precise sequencing of tool arm motions in CNC machines. Starting from 0° in the CW (clockwise) phase with low displacement that ramps up gradually to around 75°-120°, the cam drives initial tool arm rotation for positioning; this transitions into an MS (main stroke) phase and further rise by 240°, facilitating arm extension and tool grip/release. Subsequent CCW (counterclockwise) and CCV segments feature higher plateaus and sharp ramps peaking near 360°, executing reversal indexing, retraction, and dwell for cycle completion, ensuring backlash-free, bidirectional operation critical for rapid, reliable tool swaps.

The globoidal cam governs the motion of a roller follower mounted on an indexing arm, transforming continuous rotational motion into a predefined oscillating movement. The globoidal mechanism is presented in the image above.

2. COMPUTATIONAL AND CONSTRUCTIVE CONSIDERATIONS

2.1 Arm design

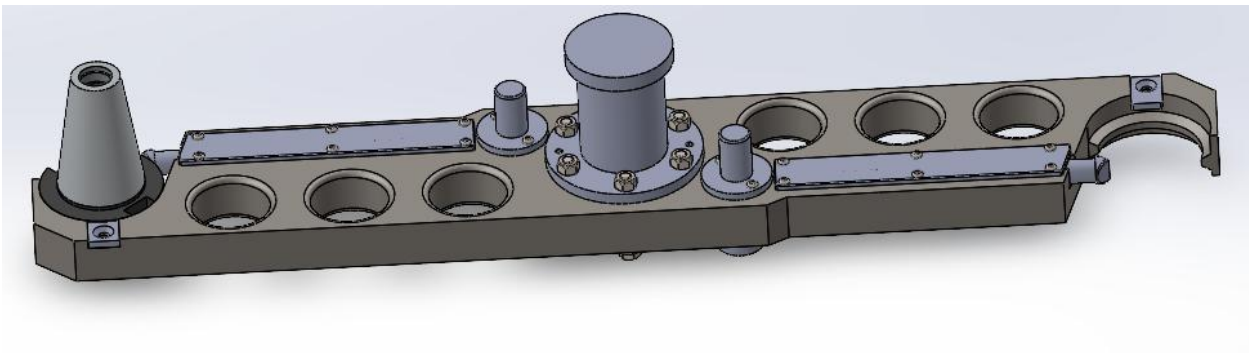

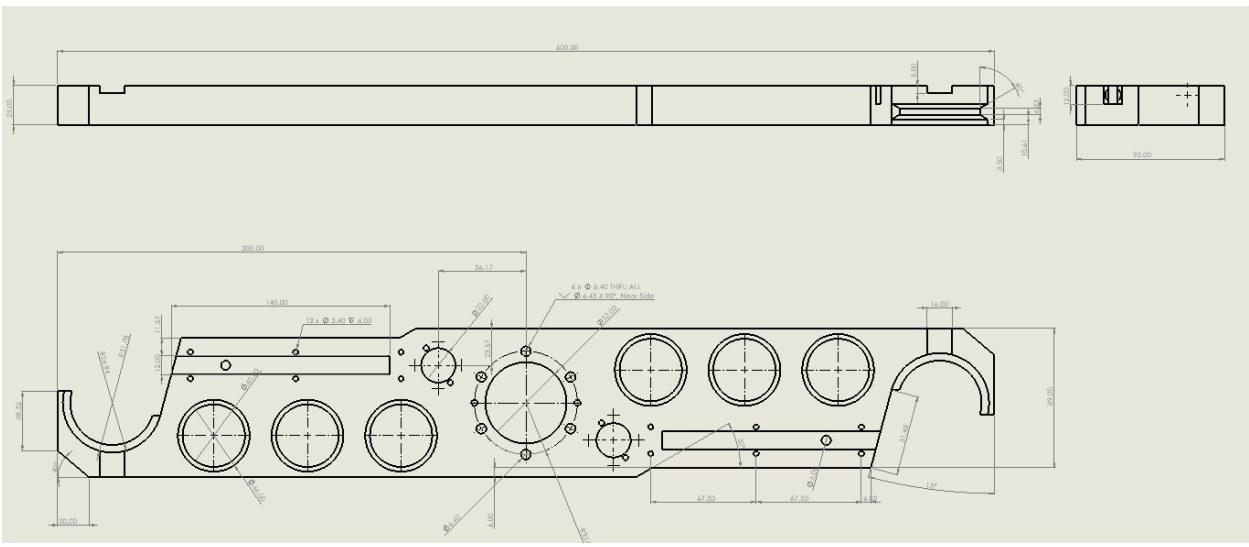

The shape of the gripper is designed first. I have selected BT40 tools and equipment for my automatic tool changer (ATC) system due to their widely recognized precision, durability, and compatibility within standard CNC machining applications. The arm has a groove that perfectly fits the tool. The finger mechanism is designed to stop the tool from changing its position during the tool interchanging process. The finger is tensioned by a compression spring. To unlock the finger, you have to press the button at the end of the finger. To reduce the weight of the arm, hollow circles have been added.

2.2 Bearing selection

For the principal shaft that connects to the arm, 2 tappered roller bearings have been chosen placed in “X” orientation. This way both the radial and axial forces are taken by the bearings. The bushing on which the bearings support on are designed conformed to the technical documentation provided by the producer.

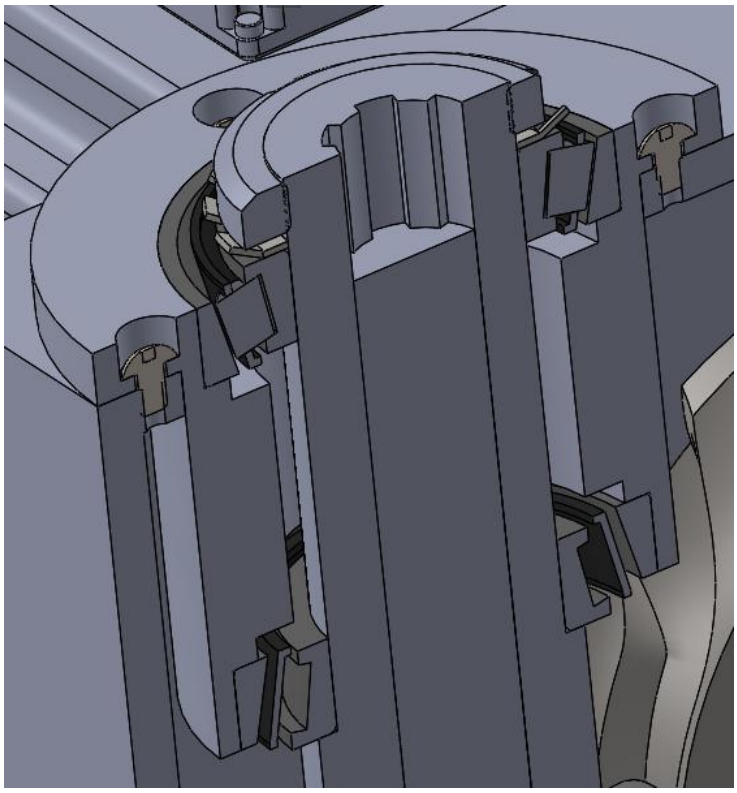

For the shaft that supports the globoidal wheel and the grooved cam wheel, a radial ball bearing is chosen.

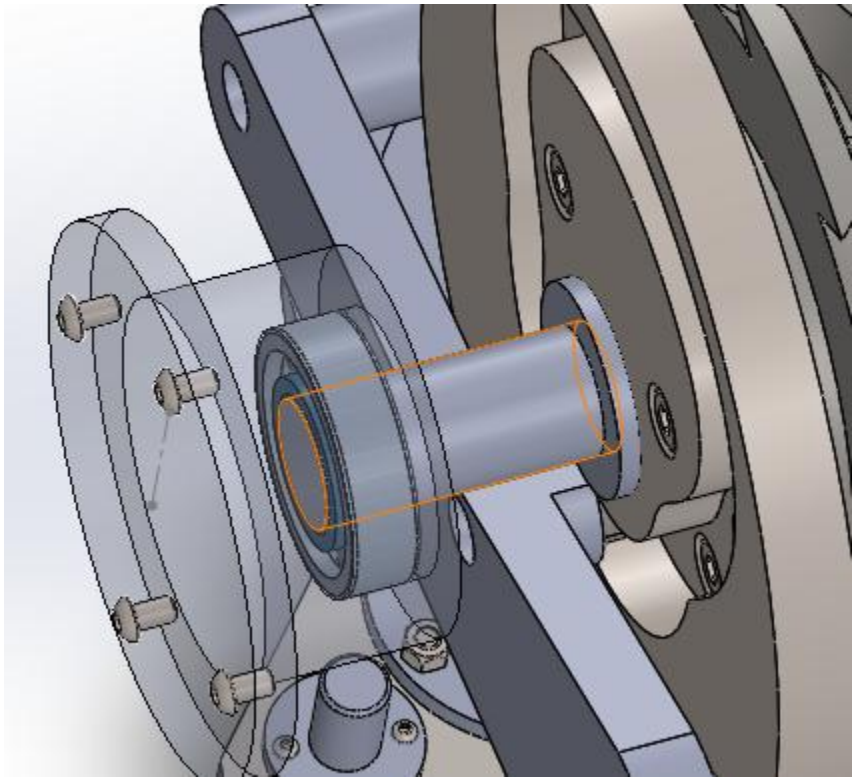

2.3 Motor selection

The motor is directly connected to the shaft, the torque being transmitted through a EKM-400 Elastomer Coupling. The motor is connected with a parallel key that goes in the coupling. The Automatic Tool Changer is actuated by a Schneider Electric AC servo motor with a nominal power of 1 kW, rated voltage of 220 V, nominal torque of 4.77 Nm, and a nominal speed of 3000 rpm.

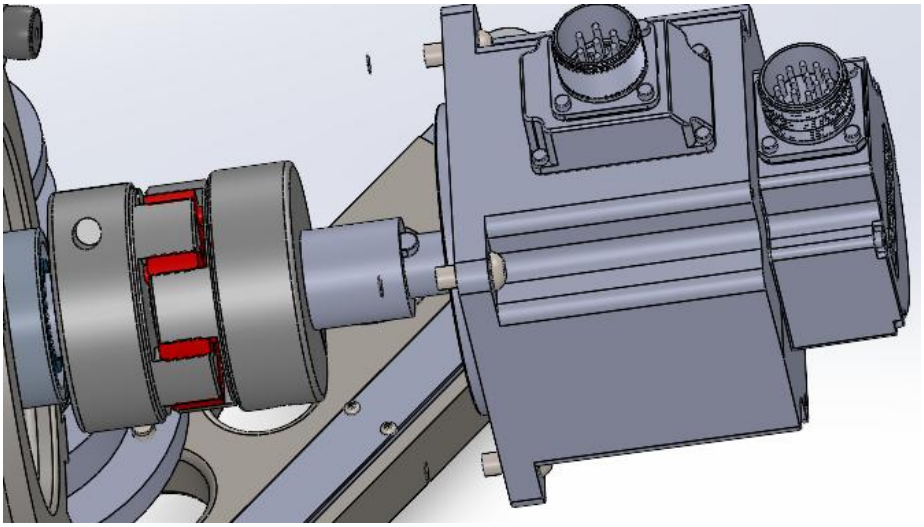

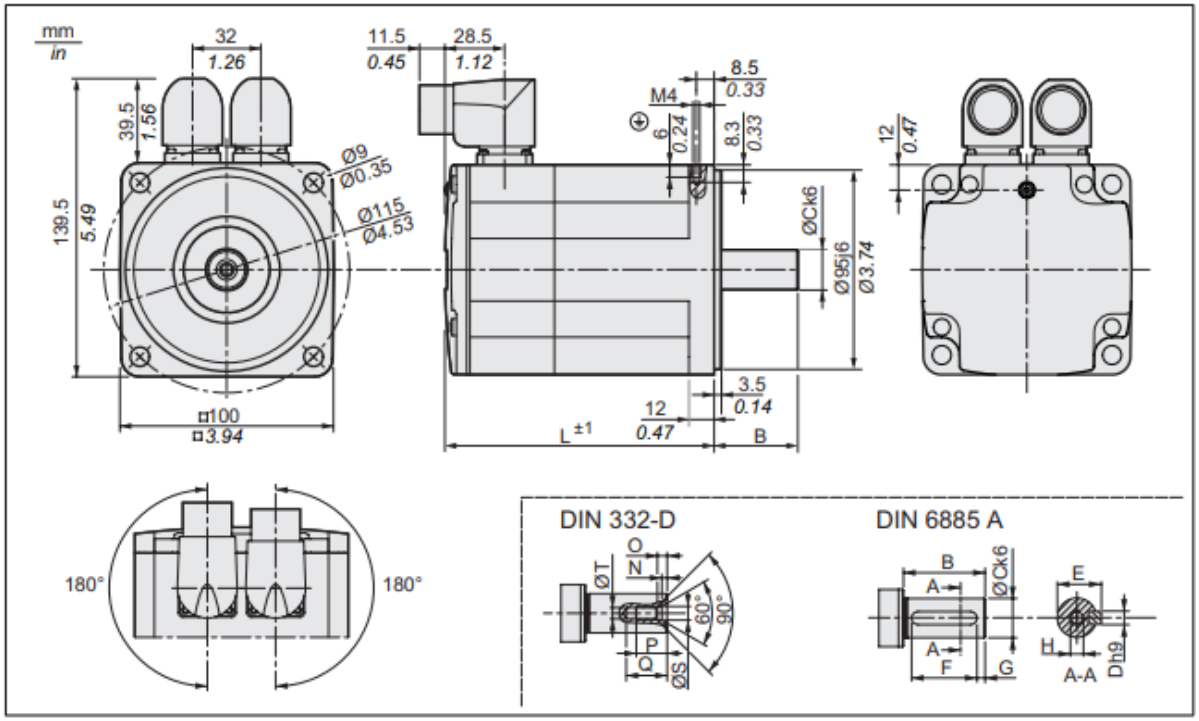

Figure 2: Dimensions MH2100

Although the motor's nominal speed is 3000 rpm, the ATC operates at significantly lower rotational speeds. The use of a servo motor allows precise speed and position control over a wide operating range, including stable operation at low speeds. This is particularly important for cam-driven mechanisms, where smooth motion is required to minimize contact stresses between the cam groove and the roller follower and to avoid shock loads during tool engagement.

2.4 Housing design considerations

The housing of the Automatic Tool Changer represents the main structural element of the mechanism, ensuring correct positioning and alignment of all rotating and stationary components. Its primary function is to support the bearings that carry the cam shaft and to maintain precise coaxiality under operational loads. By providing rigid bearing seats and axial locating surfaces, the housing guarantees stable shaft alignment, which is essential for correct cam–follower interaction and uniform load distribution across the rolling elements.

During operation, the cam–roller contact generates variable radial forces that must be absorbed without inducing deformation or misalignment. For this reason, the housing is designed with sufficient wall thickness and reinforced regions around

bearing seats and mounting interfaces. Accurate machining of the bearing bores and shoulders ensures proper fits and prevents bearing creep or unwanted axial displacement.

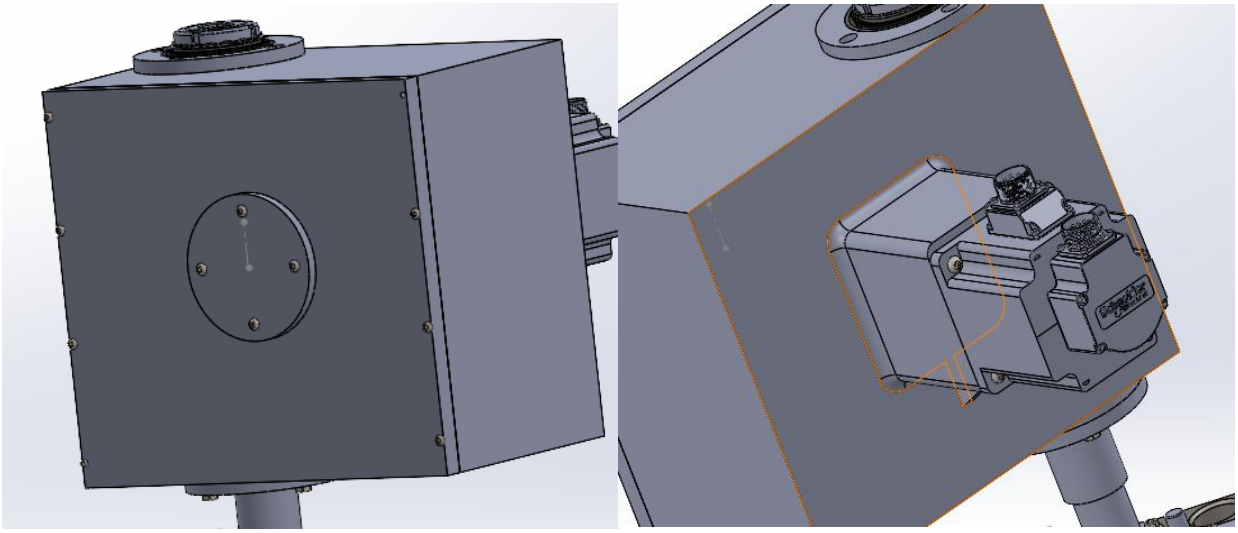

The shoulder that conducts the translation motion is also supported on the housing through a shaft that has a Axial Cylindrical Roller Bearing on one end. For the smooth movement of the shoulder, a support roller from skf was used.

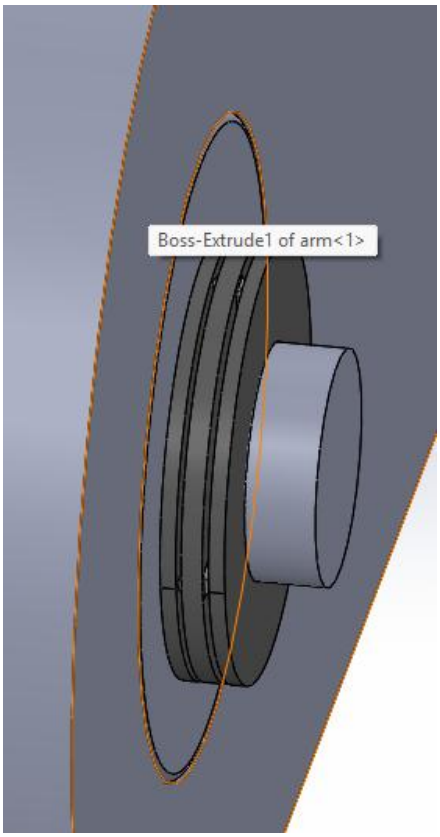

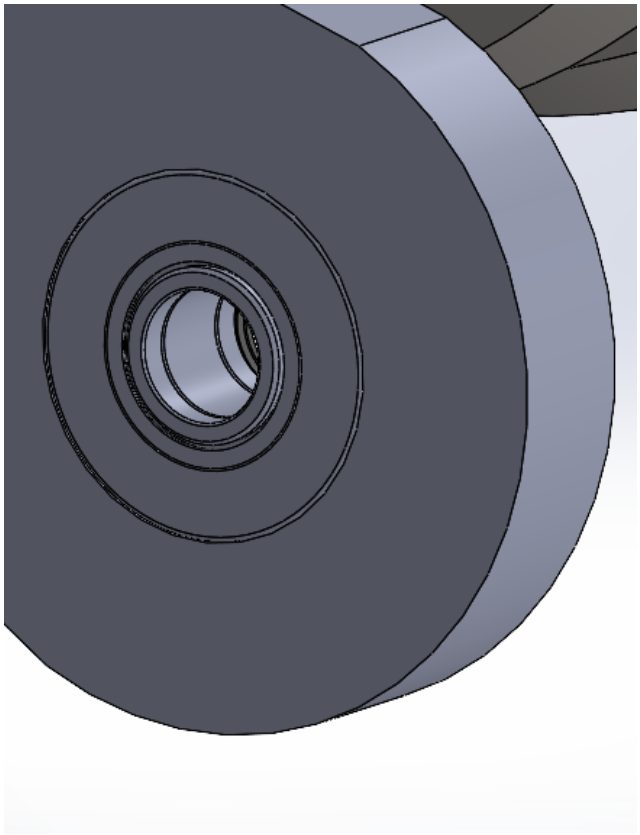

From an assembly and maintenance perspective, the housing is designed to allow straightforward installation and removal of the main components. Standardized rolling bearings and fastening elements are used to simplify sourcing and replacement. The cam roller follower is designed as a replaceable unit, allowing wear components to be serviced without complete disassembly of the mechanism. The shaft can be extracted once the bearings are released, enabling inspection or replacement with minimal effort. No special tools are required for disassembly, which improves serviceability and reduces maintenance downt

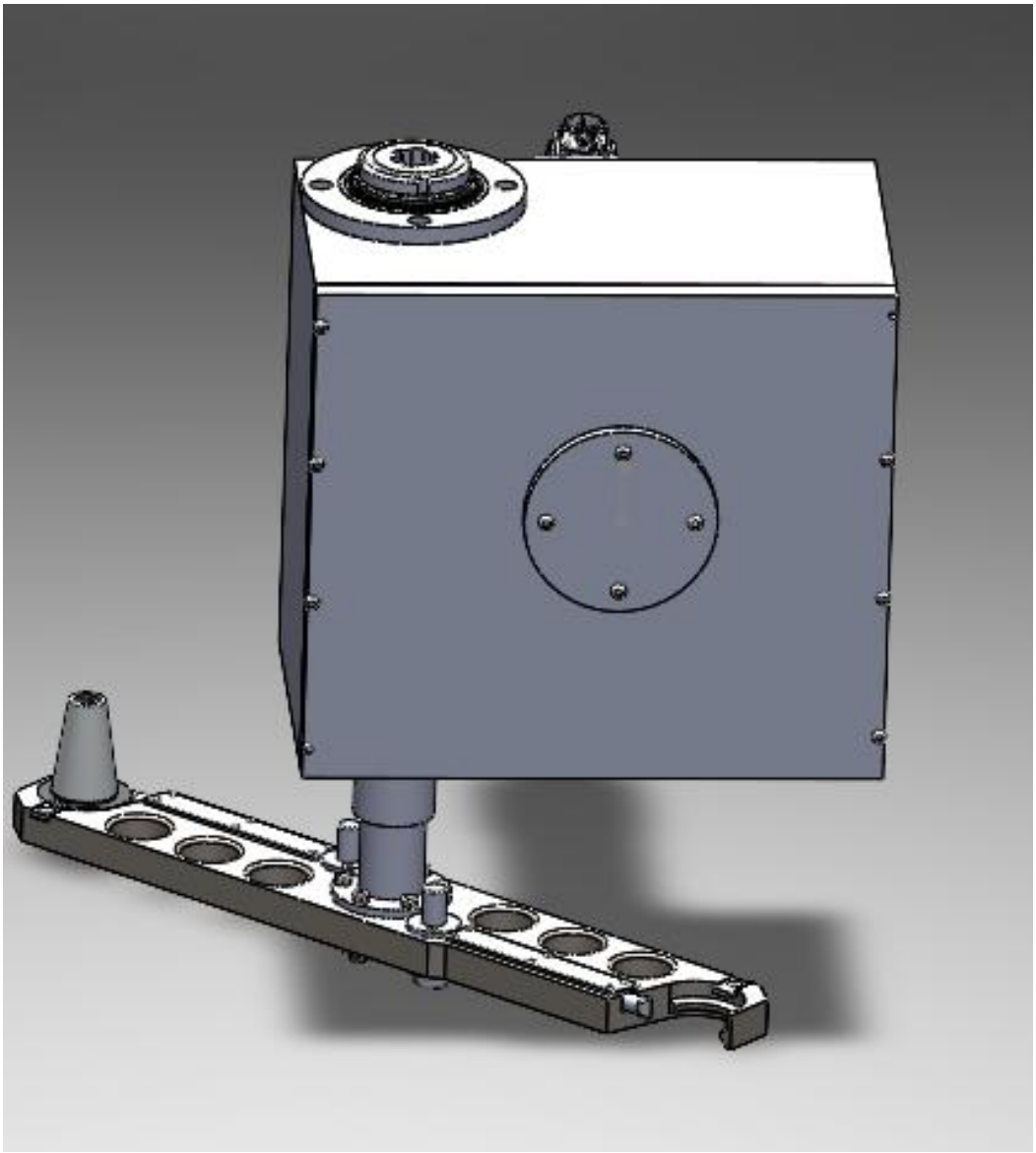

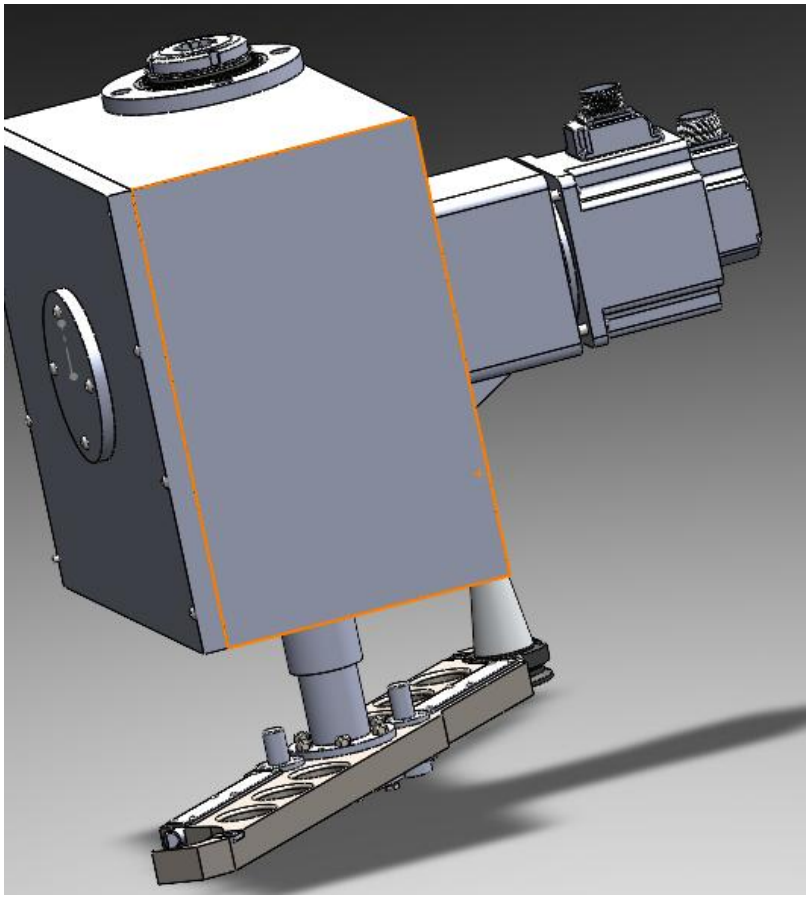

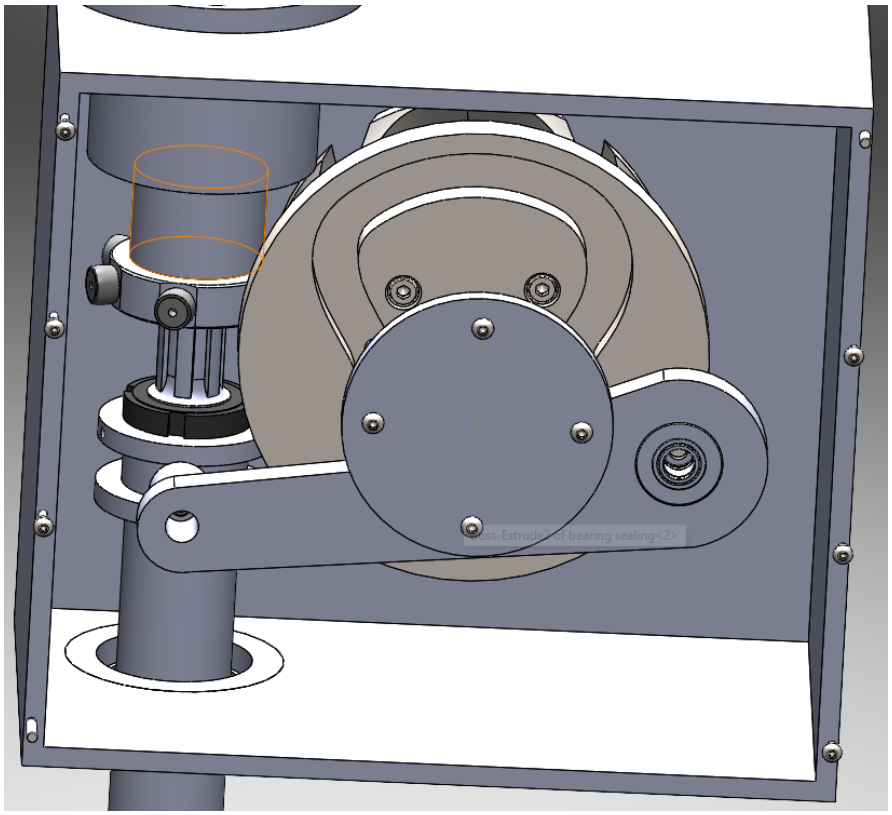
Cross-Extrude2 of bearing sealing<2>

2.5 Conclusions

The cam-driven Automatic Tool Changer with a globoidal cam mechanism provides a mechanically robust and highly repeatable solution for CNC tool exchange. By embedding the motion law directly into the cam geometry, the system eliminates the need for complex control systems and sensors. The proposed design ensures deterministic motion, high stiffness, and reliable operation, making it well suited for both industrial and academic applications.

The direct coupling between the servo motor and the cam shaft results in a stiff and backlash-free drive train. This configuration enhances the transmission of motion and ensures that the angular position of the cam corresponds accurately to the commanded motor position. As a consequence, the system exhibits predictable dynamic behavior and reduced vibrational response, which is essential for maintaining consistent tool-changing times and minimizing mechanical stress.